Wireless Door Lock Control (LHD)

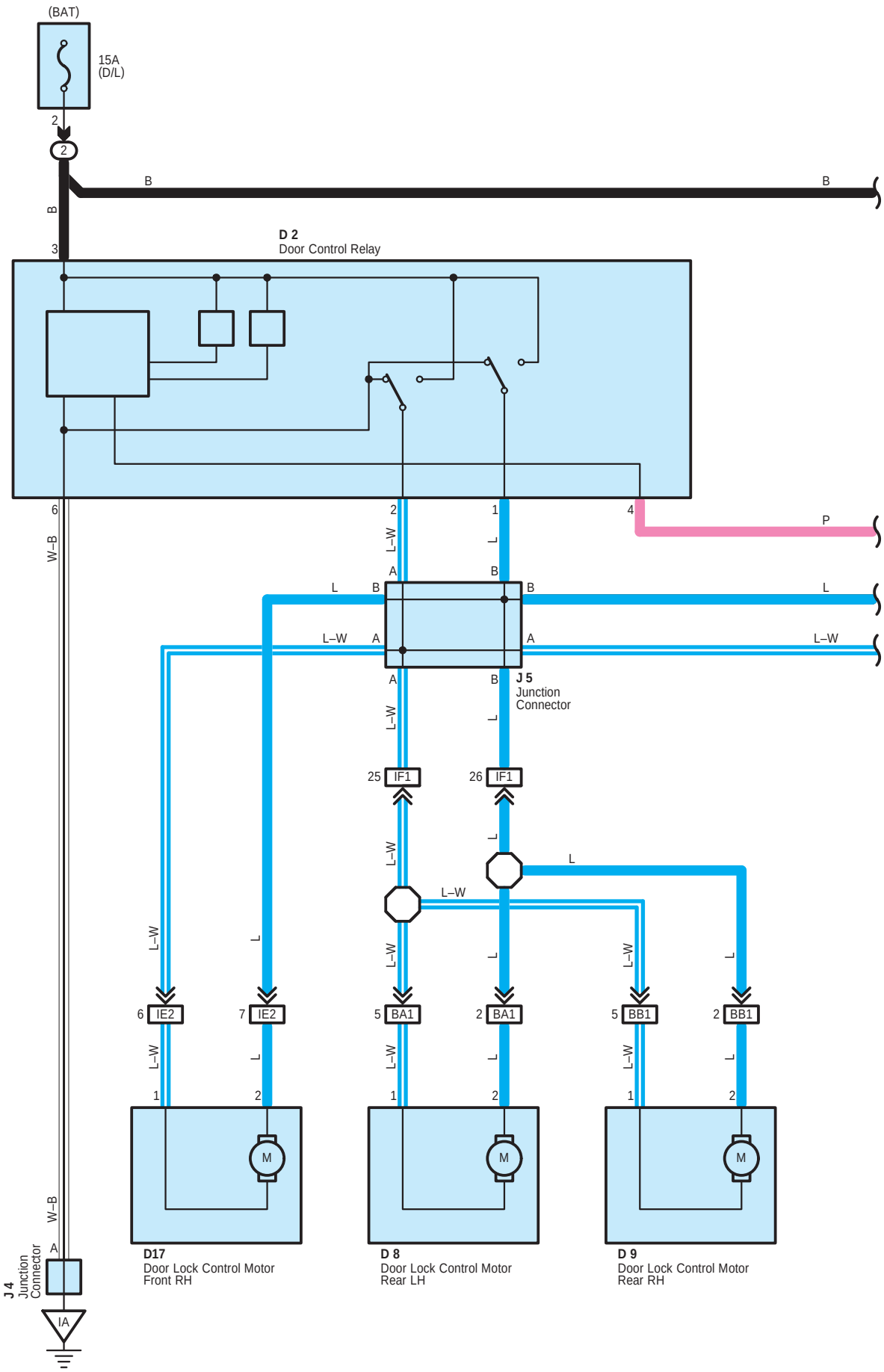

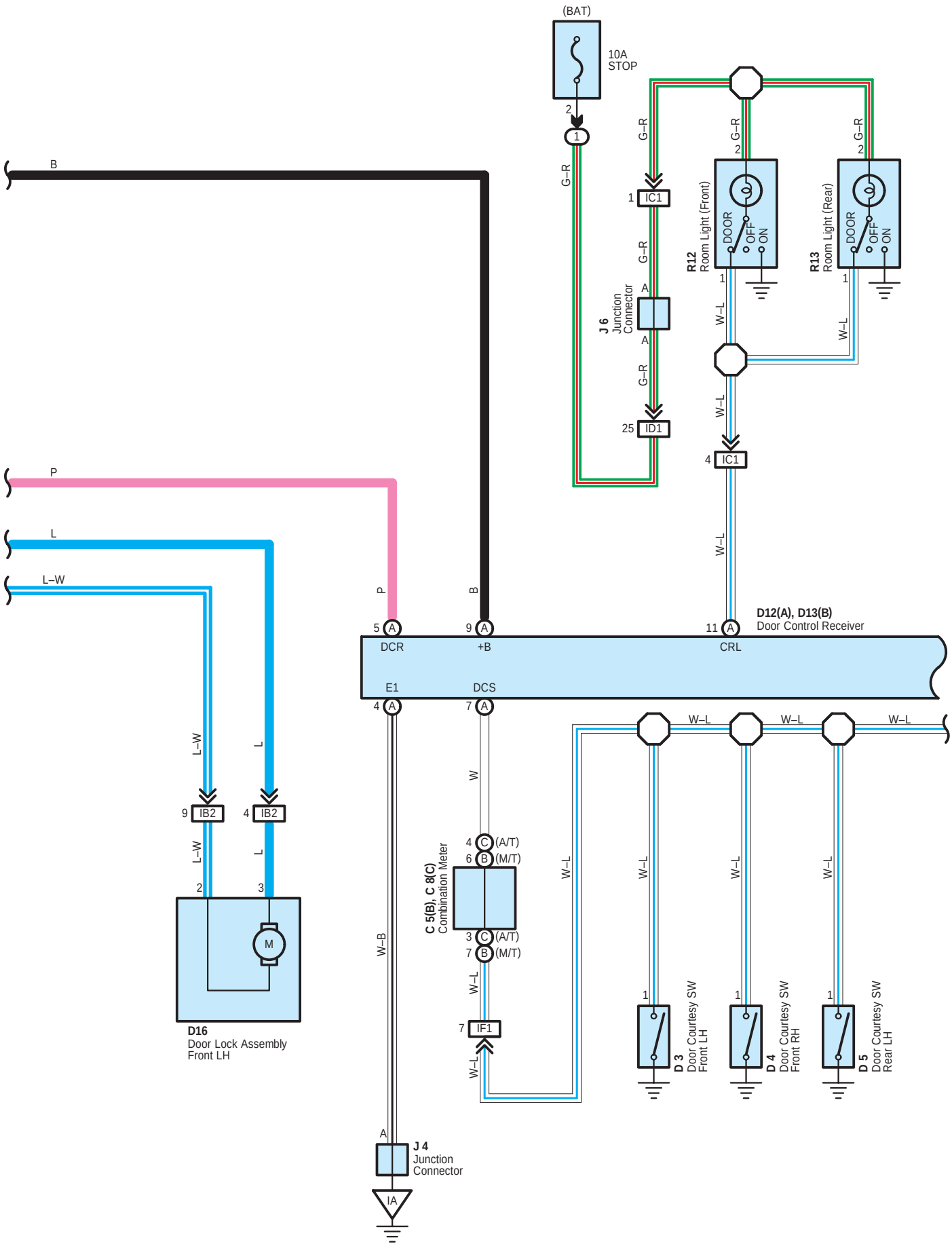
(BAT)
10A
STOP
2
1
G–R
B
1 IC1
G–R
A
J 6
Junction
Connector
A
G–R
25 ID1
G–R
2
R12
Room Light (Front)
DOOR
OFF
ON
1
W–L
G–R
2
R13
Room Light (Rear)
DOOR
OFF
ON
1
W–L
W–L
4 IC1
W–L
P
L
L–W
P
B
5 A
9 A
11 A
D12(A), D13(B)
Door Control Receiver
DCR
+B
CRL
E1
DCS
4 A
7 A
W–L
W–L
W–L
L–W
L
W
9 IB2
4 IB2
L–W
L
2
3
M
D16
Door Lock Assembly
Front LH
W–B
4 C (A/T)
6 B (M/T)
C 5(B), C 8(C)
Combination Meter
3 C (A/T)
7 B (M/T)
W–L
7 IF1
W–L
W–L
W–L
W–L
1
D 3
Door Courtesy SW
Front LH
1
D 4
Door Courtesy SW
Front RH
1
D 5
Door Courtesy SW
Rear LH
A
J 4
Junction
Connector
IA

Wireless Door Lock Control (LHD)

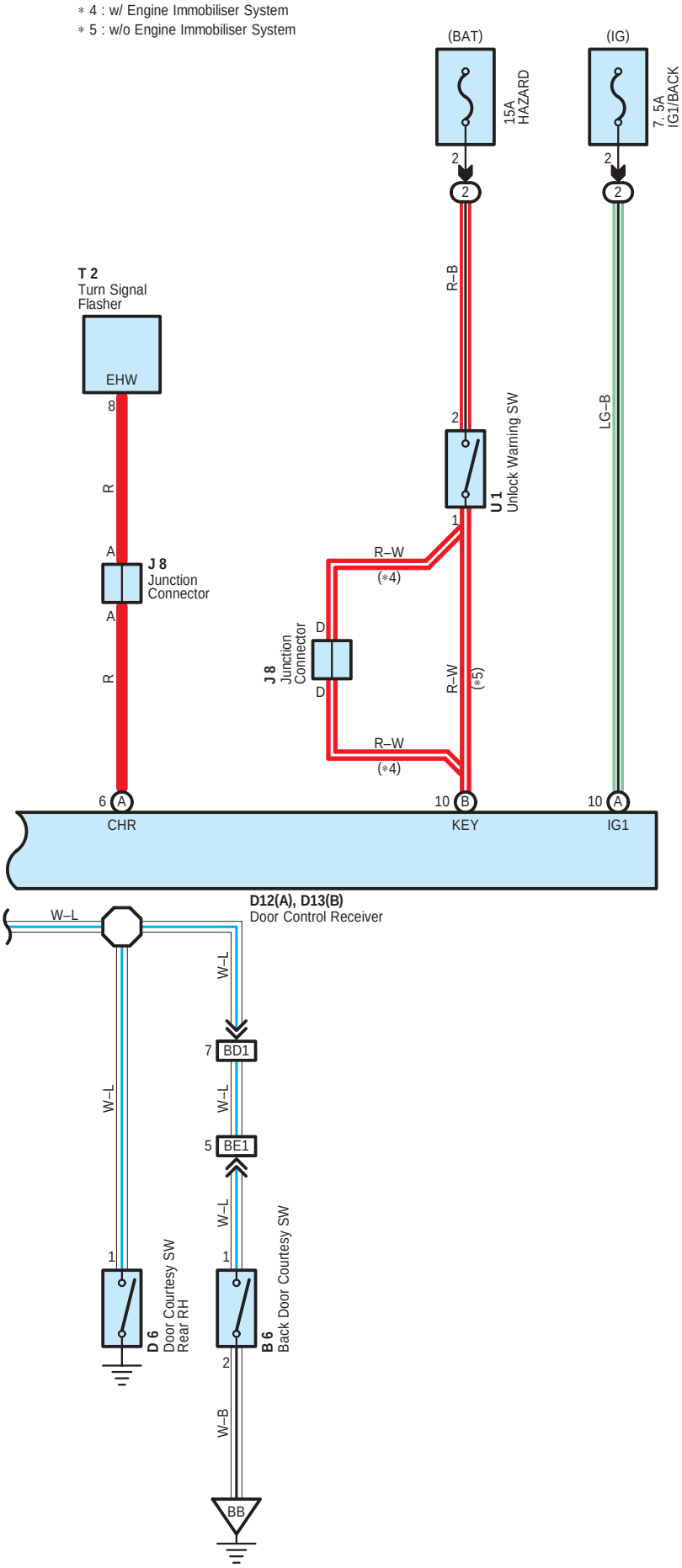

System Outline

Door lock control (Lock and unlock) is performed by remote control, without the ignition key inserted in the door key cylinder, using low–power electrical waves emitted by a transmitter.

1. Central Door Lock Control

Output door lock/unlock signal in conjuction with the door knob switch.

2. Room Lamp Control

Turn on/off room lamps when the doors are opened/closed.

3. Wireless Entry Control

Output door lock/unlock signal when door lock/unlock code from the transmitter is received.
Hazard lamps blink and room lamps turn on as answer back.

: Parts Location

Code		See Page	Code		See Page	Code	See Page
B6		30 (LHD)	D8		30 (LHD)	J6	29 (LHD)
C5	B	28 (LHD)	D9		30 (LHD)	J8	29 (LHD)
C8	C	28 (LHD)	D12	A	28 (LHD)	R12	31 (LHD)
D2		28 (LHD)	D13	B	28 (LHD)	R13	31 (LHD)
D3		30 (LHD)	D16		30 (LHD)	T2	29 (LHD)
D4		30 (LHD)	D17		30 (LHD)	U1	29 (LHD)
D5		30 (LHD)	J4		29 (LHD)		
D6		30 (LHD)	J5		29 (LHD)		

: Relay Blocks

Code	See Page	Relay Blocks (Relay Block Location)
1	22	Engine Room R/B (Engine Compartment Right)
2	23 (LHD)	Fuse Block (Left Kick Panel)

: Connector Joining Wire Harness and Wire Harness

Code	See Page	Joining Wire Harness and Wire Harness (Connector Location)
IB2	44 (LHD)	Front Door LH Wire and Instrument Panel Wire (Left Kick Panel)
IC1	44 (LHD)	Instrument Panel Wire and Roof Wire (Cowl Side Panel RH)
ID1	44 (LHD)	Engine Room Main Wire and Instrument Panel Wire (Right Kick Panel)
IE2	44 (LHD)	Front Door RH Wire and Instrument Panel Wire (Right Kick Panel)
IF1	44 (LHD)	Instrument Panel Wire and Floor Wire (Left Kick Panel)
BA1	45 (LHD)	Rear Door No.1 Wire LH and Floor Wire (Center Pillar LH)
BB1	45 (LHD)	Rear Door No.1 Wire RH and Floor Wire (Center Pillar RH)
BD1	45 (LHD)	Back Door No.2 Wire and Floor Wire (Rear Quarter Panel RH)
BE1	45 (LHD)	Back Door No.2 Wire and Back Door No.1 Wire (Right Side of Back Door)

: Ground Points

Code	See Page	Ground Points Location
IA	44 (LHD)	Right Kick Panel
BB	45 (LHD)	Right Side of Back Door